VFTR

Externally threaded 2- and 3-way zone valves

Valves used for control of hot and cold water in climate, heating and ventilation systems. They can also control glycol-mixed water in for example liquid connected recovery systems. Intended to be used together with the RVAZ4 actuators.

- Size DN15...DN25
- Kvs value 0.25...7.0
- Media temperature 1...110°C
- Pressure rating PN16
- Rangeability better than 50:1
- No leakage

Application

2-way valve

The valve is open when the stem is in its lowest position and closed when the stem is in its upmost position.

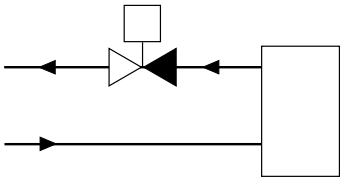

Fig. 1 2-way valve

3-way valve

The 3-way valve is closed between port A and port AB (the ports opposite to one another) when the stem is in its highest position. In this position, the valve is also open between the bottom port B and the common supply port AB. When the stem is in its lowest position, the 3-way valve is completely open between port A and port AB and consequently closed between the bottom port B and the common port AB.

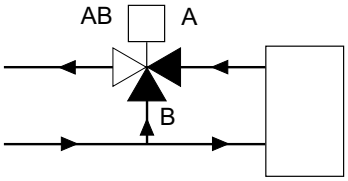

Fig. 2 3-way valve

No leakage in closed position

The valve has O-ring sealing between plug and seat, which makes it completely tight in closed position. This makes the valve very energy-efficient.

MAIN OFFICE BRESSANONE
I-39042 Bressanone (BZ)
via Julius-Durst-Str. 50
VAT No. IT02748450216
tel: +39 0472 830626
fax: +39 0472 831840
www.industrietechnik.it

Installation

The 3-way valve is of a mixing type and must therefore be mounted in the mixing point.

- Before installation of the control valve, ensure that the pipe is clean. Make sure that pipe scale, metal chips, welding slag and other foreign materials are removed.
- For maximum efficiency and minimum wear, install the valve in a vertical position with the stem pointing upward. If the valve is mounted with the actuator on the side, more wear is caused to the valve packing box. The valve should never be mounted at an angle of more than 90°. At high media temperatures, the valve is to be mounted with the spindle to the side in order to minimise heating of the valve actuator.

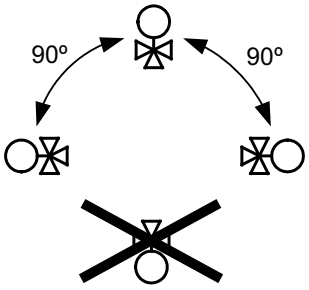

- Install the valve according to the fluid direction arrow shown on the valve.
- Make sure there is ample space above the valve to facilitate easy removal of the valve actuator.
- Fit a strainer/filter upstream of the valve to prolong the equipment's life span.
- A water quality according to VDI 2035 is recommended.

Technical data

Application	Heating systems, cooling systems, fan-coil units, ventilation systems
Pressure rating	PN16
Connection, actuator	M30 x 1.5
Connection	BSP externally threaded according to ISO 228/1
Flow characteristics	Equal percentage
Max. Leakage	0 % of the kvs value
Media	Hot water, cold water, glycol-mixed water (max. 30 % glycol)
Media temperature	1…110 °C (the valve has a max. temperature of 140°C, the RVAZ4 actuators have a max. temperature of 110°C)
Rangeability	50:1
Stroke	5.5 mm

CE UK CA

This product carries the CE-mark. More information is available at www.industrietechnik.it.

Material

Body	Brass CW614N
Seat	Brass CW614N
Plug	Brass CW614N
Stem	Stainless steel 1.4305

Seat packing	EPDM
O-rings	EPDM

2-way valves

Article	Nominal diameter	Connection	Kvs	Max. diff. pressure	Actuator
VFTR215-0,25	DN15	G½"	0.25	350 kPa	RVAZ4
VFTR215-0,4	DN15	G½"	0.4	350 kPa	RVAZ4
VFTR215-0,6	DN15	G½"	0.6	350 kPa	RVAZ4
VFTR215-1,0	DN15	G½"	1.0	350 kPa	RVAZ4
VFTR215-1,6	DN15	G½"	1.6	350 kPa	RVAZ4
VFTR220-2,0	DN20	G¾"	2.0	250 kPa	RVAZ4
VFTR220-2,5	DN20	G¾"	2.5	250 kPa	RVAZ4
VFTR220-4,0	DN20	G¾"	4.0	150 kPa	RVAZ4
VFTR220-6,0	DN20	G¾"	6.0	150 kPa	RVAZ4
VFTR225-7,0	DN25	G1"	7.0	70 kPa	RVAZ4

3-way valves

Article	Nominal diameter	Connection	Kvs	Max. diff. pressure	Actuator
VFTR315-0,25	DN15	G½"	0.25	350 kPa	RVAZ4
VFTR315-0,4	DN15	G½"	0.4	350 kPa	RVAZ4
VFTR315-0,6	DN15	G½"	0.6	350 kPa	RVAZ4
VFTR315-1,0	DN15	G½"	1.0	350 kPa	RVAZ4
VFTR315-1,6	DN15	G½"	1.6	350 kPa	RVAZ4
VFTR320-2,0	DN20	G¾"	2.0	250 kPa	RVAZ4
VFTR320-2,5	DN20	G¾"	2.5	250 kPa	RVAZ4
VFTR320-4,0	DN20	G¾"	4.0	150 kPa	RVAZ4
VFTR320-6,0	DN20	G¾"	6.0	150 kPa	RVAZ4
VFTR325-7,0	DN25	G1"	7.0	70 kPa	RVAZ4

Steel pipe connection

Article	Description	Connection	Valve
OVC-Z15	Pipe connection	½" (DN15)	VFTR, (DN15)
OVC-Z20	Pipe connection	¾" (DN20)	VFTR, (DN20)
OVC-Z25	Pipe connection	1" (DN25)	VFTR, (DN25)

Suitable valve acutators

Article	Supply voltage	Control signal
RVAZ4-24	24 V AC ±15 %	3-point
RVAZ4-24A	24 V AC/DC ±15 %	0…10 V DC
RVAZ4-230	230 V AC ±15 %, 50/60 Hz	3-point

Dimensions

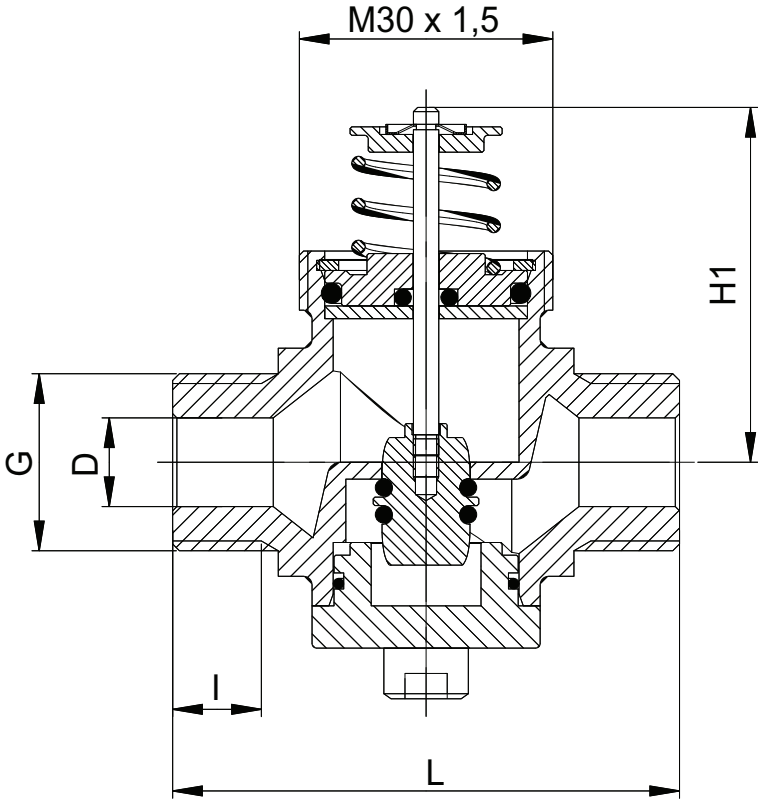

[mm], unless otherwise specified

2-way valve

Article	Connection	G	D (Ø)	I	L	H1
VFTR215-0,25	DN15	½"	12	9	60	42
VFTR215-0,4	DN15	½"	12	9	60	42
VFTR215-0,6	DN15	½"	12	9	60	42
VFTR215-1,0	DN15	½"	12	9	60	42
VFTR215-1,6	DN15	½"	12	9	60	42
VFTR220-2,0	DN20	¾"	15	12,5	60	42
VFTR220-2,5	DN20	¾"	15	12,5	60	42
VFTR220-4,0	DN20	¾"	18	12,5	60	42
VFTR220-6,0	DN20	¾"	18	12,5	60	42
VFTR225-7,0	DN25	1"	22	14	82	47

[mm], unless otherwise specified

Dimensions

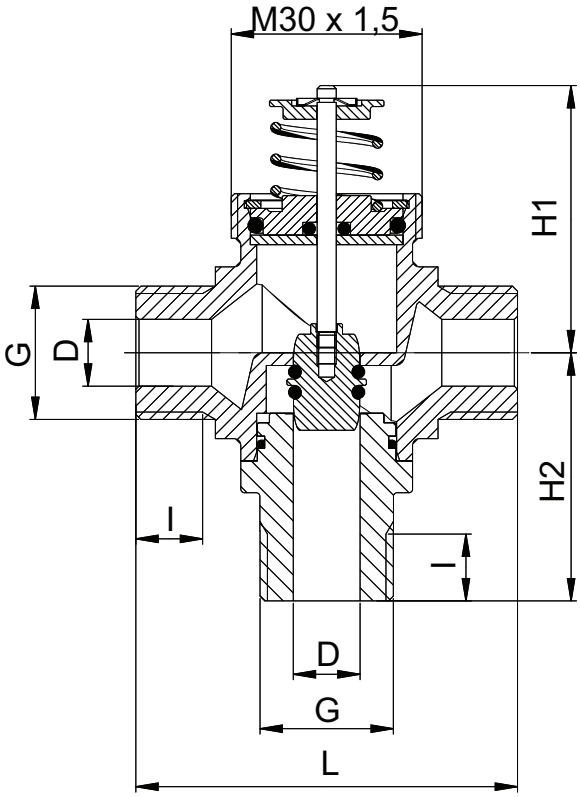

[mm], unless otherwise specified

3-way valve

Article	Connection	G	D (Ø)	l	L	H1	H2
VFTR315-0,25	DN15	½"	12	9	60	42	40
VFTR315-0,4	DN15	½"	12	9	60	42	40
VFTR315-0,6	DN15	½"	12	9	60	42	40
VFTR315-1,0	DN15	½"	12	9	60	42	40
VFTR315-1,6	DN15	½"	12	9	60	42	40
VFTR320-2,0	DN20	¾"	15	12,5	60	42	50
VFTR320-2,5	DN20	¾"	15	12,5	60	42	50
VFTR320-4,0	DN20	¾"	18	12,5	60	42	50
VFTR320-6,0	DN20	¾"	18	12,5	60	42	50
VFTR325-7,0	DN25	1"	22	14	82	47	44

Pressure drop diagram

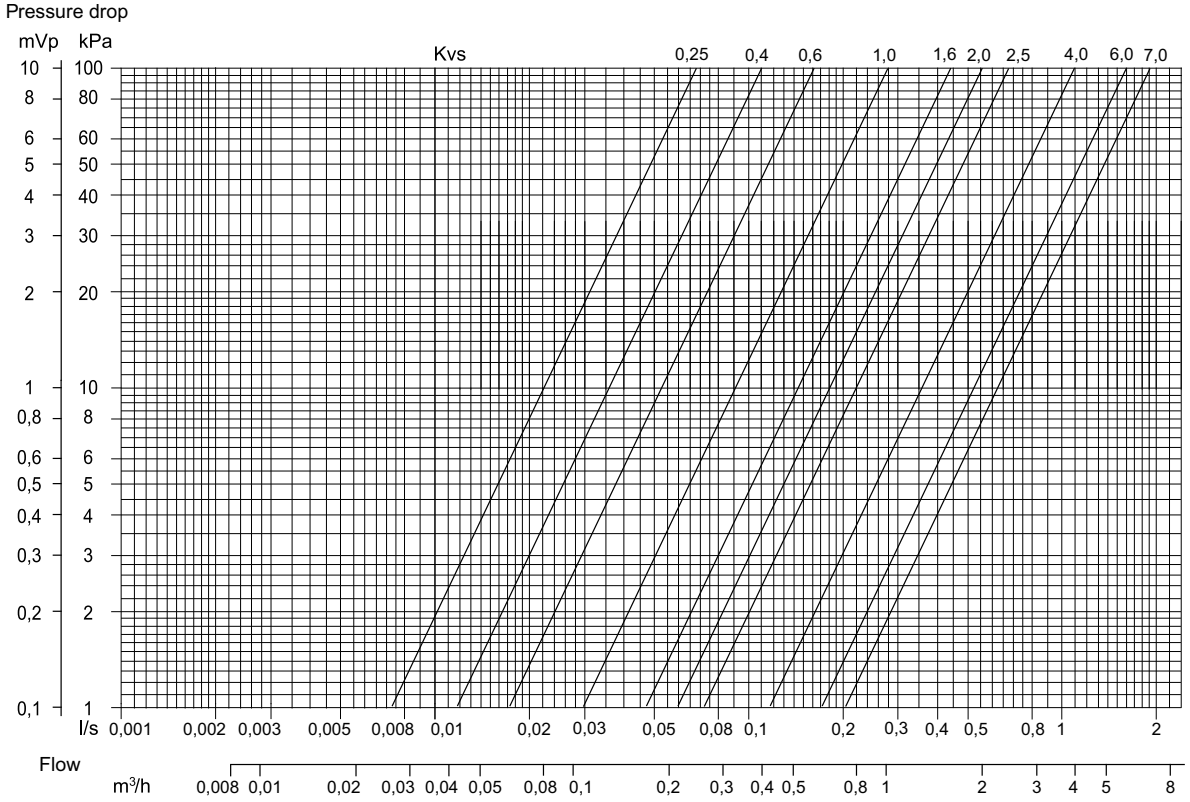

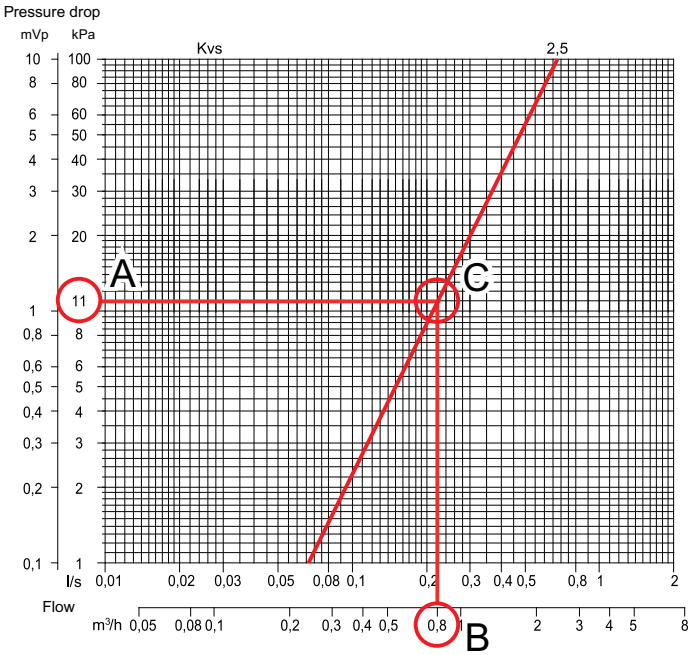

Fig. 3 Example, calculation of kv value If the pressure drop is 11 kPa (A) and the flow is 0.8 m³/h (B), the kv value is 2.5 (C). See the markings in the picture above.

Documentation

All documentation can be downloaded from www.industrietechnik.it.